A.u.S. Spielgeräte GesmbH
Scheydgasse 48 A-1210 Wien
Tel. +43-1-271 66 00 Fax.+43-1-271 66 00 75
E-mail: verkauf@aus.at
http://www.aus.at
Öffnungszeiten: Mo-Fr. 9-18 Uhr

Indoor banknote change machine

Break

Greater ease in changing banknotes

Break is the banknote changing specialist.
Break allows the player to change large denomination banknotes into smaller ones in just a few seconds with a simple operation.
In the event that the denomination required for the change is not available in the dispenser, Break will reject the inserted banknote.
The money collection compartments are protected with 8-point locking systems and special safety bars made of hardened steel; in this way, Break resists against any break-in and tampering attempt.

Features

- Remarkable banknote capacity:
  1,000 + 1,000 banknotes.
- User-friendly interface consisting of a convenient graphic LCD display and 4 handy backlit pushbuttons that are activated only during configuration operations of the banknote change machine.
- State of the art 32-bit CPU with removable SD-Card for displaying and exporting accounting data and machine configuration parameters.
- Simple programming: performed directly on the machine, either using the display and 4 pushbuttons or the SD-Card to import configuration parameters from other machines.
- The configuration menu can be accessed only from inside the machine through the configuration key located in the upper compartment.
- High security performance thanks to the armoured cabinet, special hardened steel bars and locks (optional) protecting the cash box and drawers of the banknote dispenser.

A.u.S. Spielgeräte GesmbH
Scheydgasse 48 A-1210 Wien
Tel. +43-1-271 66 00 Fax.+43-1-271 66 00 75
E-mail: verkauf@aus.at
http://www.aus.at
Öffnungszeiten: Mo-Fr. 9-18 Uhr

Technical Drawings

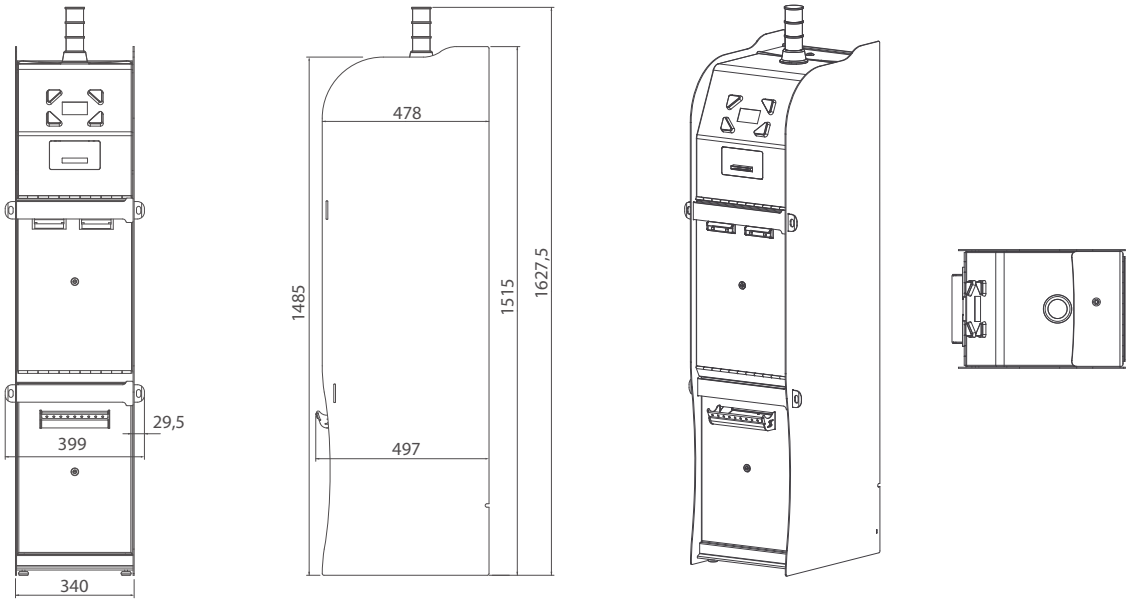

Note: *Unit of measurement: mm*

Functions

Banknote change

From large denomination banknotes to smaller ones in just a few seconds, thanks to the NV200 banknote reader, which can manage up to 7 different denominations (from € 5 to € 500), and the Puloon 2-drawer banknote dispenser.

Accounting records and export

The 32-bit CPU and the removable SD-Card allow the display and export of the machine accounting data in order to process the data in excel format and save it on the PC.

Installed peripheral devices

- NV200 banknote reader
- Puloon banknote dispenser with two drawers that store 1,000 banknotes each

Optional peripheral devices

- Additional NV200 banknote reader
- Printer

Optional accessories

- Diagnostic lights (Tower Light)
- Lock protecting the cash box located under the banknote reader
- Lock protecting the 2 drawers of the banknote dispenser
- Floor or wall fastening bracket

High security levels against any type of tampering.

Technical specifications

Dimensions (LxHxD)	340 x 1.515 x 478 mm
Weight	110 Kg
Supply voltage	230 Vac - 50 Hz
Current consumption	1 A
Operating temperature	5 ÷ 50 °C

Banknote capacity

Puloon banknote dispenser with two drawers	1,000 + 1,000

Dispenses banknotes in denominations of € 5, € 10, € 20 e € 50 (2 denominations to be selected among the indicated ones).